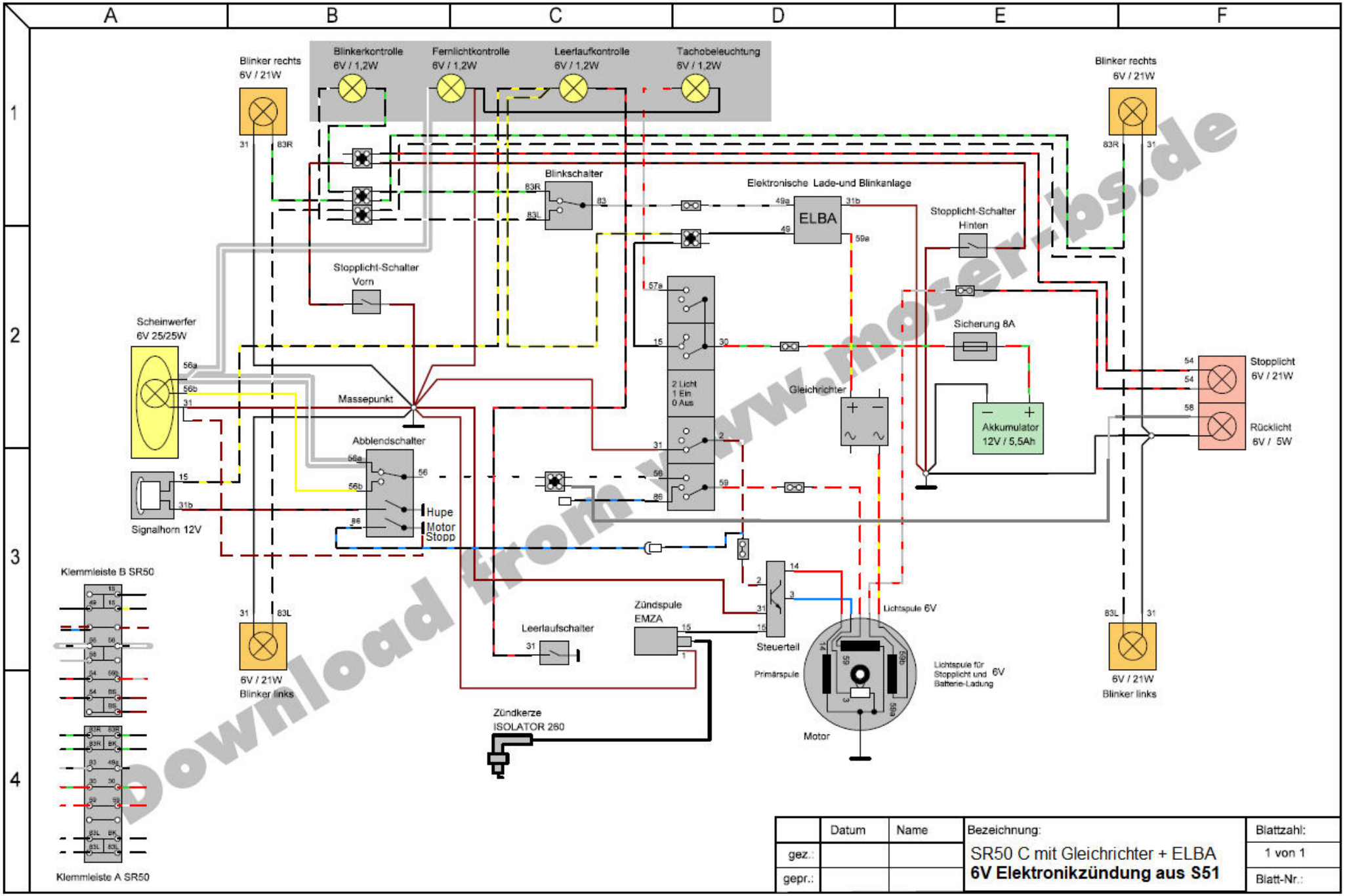

Download from www.moser-fbs.de