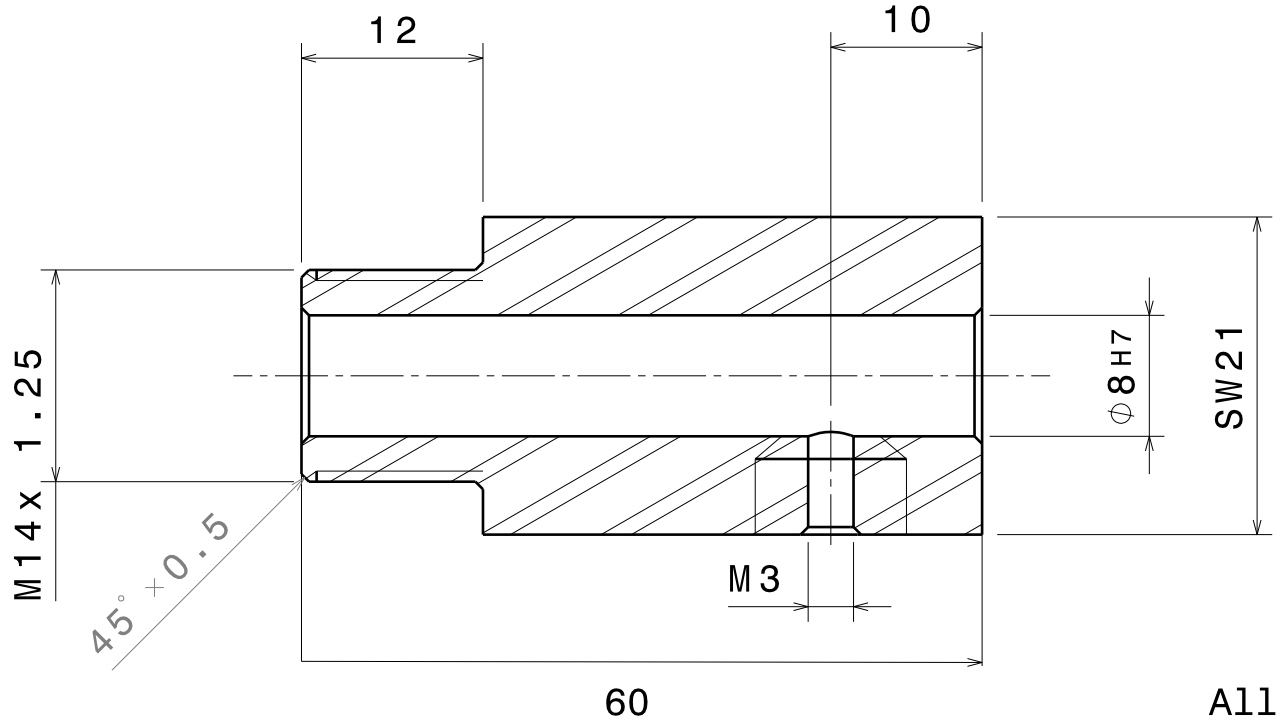

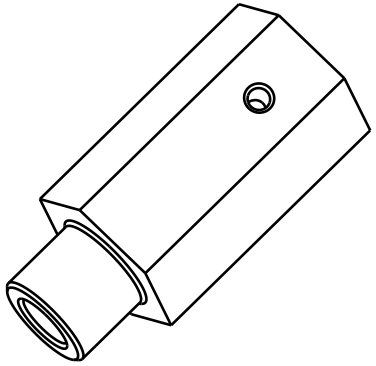

Alle Kanten entgratet
Bohrungen angesenkt

DESIGNED BY: ----			
DATE: 06.07.2014			
Toleranz: DIN ISO 2768-m			
DATE: XXX			
SIZE A4		Halter	
SCALE 2:1	WEIGHT (kg) 0,00	DRAWING NUMBER	SHEET 1/1

This drawing is our property; it can't be reproduced or communicated without our written agreement.

I	_
H	_
G	_
F	_
E	_
D	_
C	_
B	_
A	_